Generation-X

Data Systems

Frank Stocklin
Ron Vento
Dale Shama
Leslie Ambrose

July 27, 2000

Data Systems
Topics

- Overview
- Driving Requirements and Assumptions
- Options considered
- Selected Configuration and Rationale
- Mass, Power, and Cost Summary
- Risk Assessment
- Issues and Concerns

Data Systems Overview

- **X-band**
  - Telemetry for stored data @ 1 Mbps 30 min/day using gimbaled HGA (per spacecraft)
  - Command at 2 kbps
  - Emergency mode (omni antennas)
    - 2 kbps command/4 kbps telemetry
  - Ranging @ 1 contact/day
- **Time share support to each of 4 s/c**
- **Baseline 34M DSN**
- **On board storage for 3 days (1 Gbyte)**
- **Data distribution**
  - Real-time data (Housekeeping and Instrument) to be sent in near real time to MOC
  - Stored data to be FTP'd to MOC from remote site post-contact
- **Commanding required to start and terminate dumps**

Data Systems
Driving Requirements & Assumptions

- **Mission Life: 3-5 years**
- **Lifetime Goal: 5-10 years**
- **Launch date: 2015**
- **L2 location**
- **Data latency: 24 hours from observation to delivery of quick look data set**
- **Command capability within 2 hours of request**
- **Data compression: 2:1 loss-less data compression**
- **BER = 10^{-6}**
- **CCSDS data structure (15% overhead)**
- **Orbit knowledge: 1 km**
  - 1 ranging contact/day (1 hour)
- **4 independent, identical spacecraft**

Data Systems
Driving Requirements & Assumptions

- **Full redundancy on communication equipment (except antennas)**
- **Aggregate instrument data rate = 1 Gbits/day**
  - Peak collection rate: 10 kbps
  - Assumed data compression and includes CCSDS overhead
- **Housekeeping rate = 9.2 Kbps**
  - Includes CCSDS overhead
  - Actual rate = 8 kbps
- **Total rate = 1.7 Gbits/day**
- **Ranging required to maintain 1 km orbit accuracy**
- **Ranging and Telemetry/Command can be simultaneous**

Data Systems
Options Considered

- **S Band**
  - Less atmospheric attenuation
  - Allow use of 26M DSN (& also 13M commercial solution)
  - Will require significantly more EIRP to close link
  - **Not recommended**
- **X Band**
  - Additional (2 dB) atmospheric attenuation
  - Improves link margin
  - Requires use of 34M, primarily for needed ranging accuracy
  - Allows possible use of 13M commercial network
  - **Recommended**

Data Systems
Options Considered

- **S/C Antenna Size (with 5 watt transmitter)**
  - 1.1 meter (Recommended)
    - 13 meter antenna can support 1 Mbps
    - Ranging with 13 meter may be possible in future
  - 0.3 meter
    - Must use 34 meter for 1 Mbps data dump
    - Must use 34 meter for ranging
- **Ground Antenna (with 1.1 meter s/c antenna)**
  - 34 Meter (Recommended)
    - Can do ranging and telemetry simultaneously
    - Can do > 4 kbps in the omni mode
  - 13 Meter
    - Ranging and telemetry would probably have to be done separately
    - Can do 360 bps in the omni mode

Data Systems
Selected Configuration and Rationale

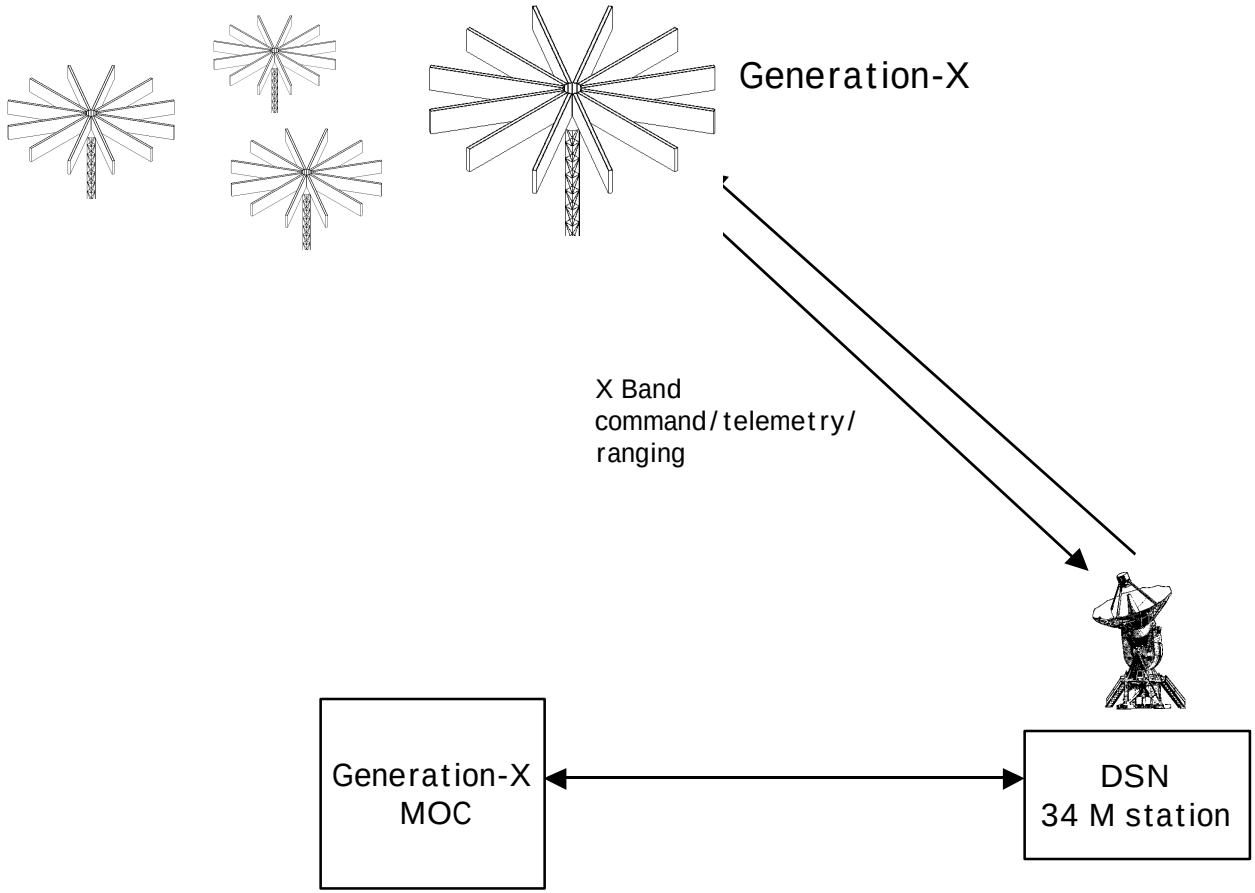

Data Systems
Selected Configuration and Rationale

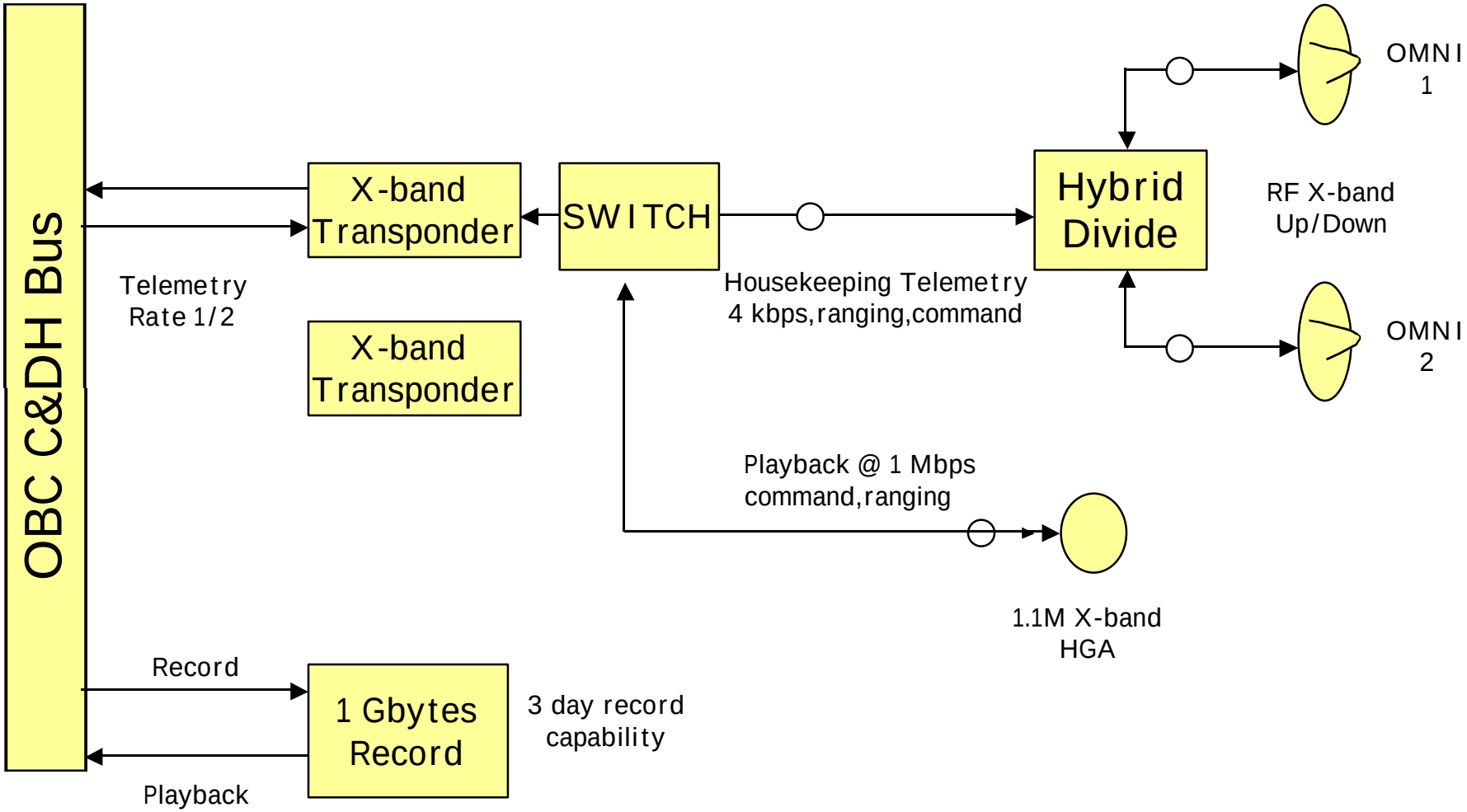

Data Systems
Selected Configuration and Rationale

- **X Band for hi-rate dumps**
  - 1.1 m gimbaled antenna fits in mechanically with s/c design & closes link @ 1 Mbps
  - Gimbal once per day
  - +/-30° (depends on orbit) gimbal capability required on-station
  - Gimbal capabilities for early orbit support will need to be analyzed by project based on spacecraft attitude
  - 1 Mbps requires 1/2 hour of ground contact time (per spacecraft per day)
    - DSN 34 meter requires an additional time for set-up
  - Design allows possible use of leased 13m ground terminals

Data Systems
Selected Configuration and Rationale

- **X Band for T&C**
  - Omni antennas chosen to ensure spherical coverage
  - 2 kbps command with 34 meter (70 bps with 13 meter)
  - 4000 bps telemetry with 34 meter (360 bps with 13 meter)
  - Ranging requires 34 meter ground system to close link

GEN-X Link Margin Summary

Link	Margin (dB) Max Range	Comments
2 kbps command 70 bps command	19.2 0	34 m- s/c omni 13 m-s/c omni
4.0 kbps telemetry 360 bps telemetry	1.8 0	34 m –s/c3omni 13 m –s/c omni
1 Mbps X-band data dump	15.0 1.0	34 m-s/c 1.1 m 13 m-s/c 1.1m
Ranging	Positive ??	34 m 13 m

Note: Assumes 0 dBi omni antenna gain (approximately 90% of the time)

Data Systems
Mass, Power, and Cost Summary

Component	Power	Mass	Cost
X-band Omni Antenna W/pedestal (2)		2 kg	$100 k
X-band Transponder (2)	5 watts continuous(Rx) 33 w 10% duty cycle(Tx)	6 kg	$800 k
Switches, hybrids, Cables and diplexers		2 kg	$50 k
C&DH	20 watts	10 kg	$2.0 M
X-band HGA And gimbal	16 watts peak 1 watt average	35 kg	$ 5.0 M
TOTAL	**74 watts peak** **30 watts average**	**55 kg**	**$7.95 M**

Costs are in FY 2000 Dollars. Appropriate adjustments for inflation will need to be made

Data Systems
Ground Station Cost Summary

- DSN 34 Meter Costs are not projected out past FY 2003

Data Systems
Risk Assessment

- None

Data Systems
Issues and Concerns

- Availability of the 34 meter DSN for up to 4 (8 hrs) passes/day
- Availability of 34 meter antenna within 2 hours of request
- X-band uplink and ranging capability through the 13 meter net

Back-up Slides

Generation-X Link Calculations

1 GENERATION X
DOWNLINK
FREQUENCY - 8450.000 MHZ
GROUND ANTENNA - DSN - 34 METER BWG
POWER - 5.00 WATTS
98% AVAILABILITY
1.1 METER S/C ANTENNA
LOSSES INCLUDE ATMOSPHERICS AND RAIN

PARAMETERS	UNITS	VALUES (MAX RNG: 1705259. KM 10.0 EL)	VALUES (MIN RNG: 150000. KM 90.0 EL)	ESTIMATED TOLERANCES DB FAV	ESTIMATED TOLERANCES DB ADV
TOTAL TRANSMITTER POWER	DBM	37.0	37.0	1.0	-1.0
SPACECRAFT PASSIVE LOSSES	DB	-2.0	-2.0	.2	-.2
SPACECRAFT ANTENNA GAIN	DBI	37.5	37.5	.0	.0
FREE SPACE DISPERSION LOSS	DB	-235.6	-234.5	.0	.0
ATMOSPHERIC LOSS	DB	-2.5	.0	.0	.0
ANTENNA GAIN (EFFECTIVE)	DBI	68.0	68.0	.0	.0
COMBINER LOSS	DB	-.5	-.5	.0	.0
POLARIZATION LOSS	DB	.0	.0	.0	.0
MAXIMUM TOTAL RECEIVED POWER	DBM	-98.1	-94.5	1.0	-1.0
SPACECRAFT ANTENNA NULL DEPTH	DB	.0	.0	.0	.0
MINIMUM TOTAL RECEIVED POWER	DBM	-98.1	-94.5	1.0	-1.0
SYSTEM NOISE DENSITY	DBM/HZ	-181.6	-182.0	.0	.0
IF NOISE BW(9000.000 KHZ)	DB-HZ	69.5	69.5	.0	.0
IF SNR (MIN)	DB	13.9	18.0	1.0	-1.0
CARRIER CHANNEL					
CARRIER/TOTAL POWER	DB	-7.1	-7.1	.7	-.7
RECEIVED CARRIER POWER (MIN)	DBM	-105.2	-101.6	1.2	-1.2
CARRIER LOOP NOISE BANDWIDTH(10. HZ)	DB-HZ	10.0	10.0	.0	.0
NOISE POWER	DBM	-171.6	-172.0	.0	.0
CARRIER/NOISE	DB	66.4	70.4	1.2	-1.2
REQUIRED CARRIER/NOISE	DB	10.0	10.0	.0	.0
AVAILABLE CARRIER MARGIN	DB	56.4	60.4	1.2	-1.2
REQUIRED PERFORMANCE MARGIN	DB	3.0	3.0	.0	.0
NET MARGIN	DB	53.4	57.4	1.2	-1.2
DATA CHANNEL (PCM/PM)					
DATA/TOTAL POWER(MI=1.10 RAD)	DB	-1.3	-1.3	.1	-.1
RECEIVED DATA POWER (MIN)	DBM	-99.4	-95.8	1.0	-1.0
INFORMATION RATE(1000.000 KBPS)	DB-BPS	60.0	60.0	.0	.0
AVAILABLE SIGNAL/NOISE DENSITY	DB-HZ	82.2	86.2	1.0	-1.0
REQUIRED ENERGY PER BIT/NOISE DENSITY (BER= E-5)	DB	4.2	4.2	.0	.0
REQUIRED SIGNAL/NOISE DENSITY	DB-HZ	64.2	64.2	.0	.0
AVAILABLE SIGNAL MARGIN	DB	18.0	22.0	1.0	-1.0
REQUIRED PERFORMANCE MARGIN	DB	3.0	3.0	.0	.0
NET MARGIN	DB	15.0	19.0	1.0	-1.0

Generation-X Link Calculations

GENERATION X
DOWNLINK
FREQUENCY - 8450.000 MHZ
GROUND ANTENNA - DSN - 34 METER BWG
POWER - 5.00 WATTS
98% AVAILABILITY
S/C OMNI ANTENNA
LOSSES INCLUDE ATMOSPHERICS AND RAIN

PARAMETERS	UNITS	VALUES (MAX RNG: 1705259. KM 10.0 EL)	VALUES (MIN RNG: 150000. KM 90.0 EL)	ESTIMATED TOLERANCES DB FAV	ESTIMATED TOLERANCES DB ADV
TOTAL TRANSMITTER POWER	DBM	37.0	37.0	1.0	-1.0
SPACECRAFT PASSIVE LOSSES	DB	-2.0	-2.0	.2	-.2
SPACECRAFT ANTENNA GAIN	DBI	.0	.0	.0	.0
FREE SPACE DISPERSION LOSS	DB	-235.6	-234.5	.0	.0
ATMOSPHERIC LOSS	DB	-2.5	.0	.0	.0
ANTENNA GAIN (EFFECTIVE)	DBI	68.0	68.0	.0	.0
COMBINER LOSS	DB	-.5	-.5	.0	.0
POLARIZATION LOSS	DB	.0	.0	.0	.0
MAXIMUM TOTAL RECEIVED POWER	DBM	-135.6	-132.0	1.0	-1.0
SPACECRAFT ANTENNA NULL DEPTH	DB	.0	.0	.0	.0
MINIMUM TOTAL RECEIVED POWER	DBM	-135.6	-132.0	1.0	-1.0
SYSTEM NOISE DENSITY	DBM/HZ	-181.6	-182.0	.0	.0
IF NOISE BW(9000.000 KHZ)	DB-HZ	69.5	69.5	.0	.0
IF SNR (MIN)	DB	-23.6	-19.5	1.0	-1.0
CARRIER CHANNEL					
CARRIER/TOTAL POWER	DB	-6.9	-6.9	.7	-.7
RECEIVED CARRIER POWER (MIN)	DBM	-142.5	-138.9	1.2	-1.2
CARRIER LOOP NOISE BANDWIDTH(10. HZ)	DB-HZ	10.0	10.0	.0	.0
NOISE POWER	DBM	-171.6	-172.0	.0	.0
CARRIER/NOISE	DB	29.1	33.1	1.2	-1.2
REQUIRED CARRIER/NOISE	DB	10.0	10.0	.0	.0
AVAILABLE CARRIER MARGIN	DB	19.1	23.1	1.2	-1.2
REQUIRED PERFORMANCE MARGIN	DB	3.0	3.0	.0	.0
NET MARGIN	DB	16.1	20.1	1.2	-1.2
DATA CHANNEL (PCM/PM)					
DATA/TOTAL POWER(MI=1.10 RAD)	DB	-1.0	-1.0	.1	-.1
RECEIVED DATA POWER (MIN)	DBM	-136.6	-133.0	1.0	-1.0
INFORMATION RATE(4.000 KBPS)	DB-BPS	36.0	36.0	.0	.0
AVAILABLE SIGNAL/NOISE DENSITY	DB-HZ	45.0	49.0	1.0	-1.0
REQUIRED ENERGY PER BIT/NOISE DENSITY (BER= E-5)	DB	4.2	4.2	.0	.0
REQUIRED SIGNAL/NOISE DENSITY	DB-HZ	40.2	40.2	.0	.0
AVAILABLE SIGNAL MARGIN	DB	4.8	8.8	1.0	-1.0
REQUIRED PERFORMANCE MARGIN	DB	3.0	3.0	.0	.0
NET MARGIN	DB	1.8	5.8	1.0	-1.0

Generation-X Link Calculations

GENERATION X
UPLINK
FREQUENCY - 7200.000 MHZ
GROUND ANTENNA - - - 34 METER
POWER - 4.0000 K WATTS

PARAMETERS	UNITS	VALUES (MAX RNG: 1700000. KM 10.0 EL)	VALUES (MIN RNG: 150000. KM 90.0 EL)	ESTIMATED TOLERANCES DB FAV	ESTIMATED TOLERANCES DB ADV
EFFECTIVE RADIATED POWER	DBM	133.0	33.0	1.0	-1.0
FREE SPACE DISPERSION LOSS	DB	-234.2	-233.1	.0	.0
ATMOSPHERIC LOSS	DB	.0	.0	.0	.0
POLARIZATION LOSS	DB	-.5	-.5	.0	.0
SPACECRAFT ANTENNA GAIN	DBI	.0	.0	.0	.0
SPACECRAFT PASSIVE LOSS	DB	-5.0	-5.0	.5	-.5
MAXIMUM TOTAL RECEIVED POWER	DBM	-106.7	-105.6	1.1	-1.1
SPACECRAFT ANTENNA NULL DEPTH	DB	.0	.0	.0	.0
MINIMUM TOTAL RECEIVED POWER	DBM	-106.7	-105.6	1.1	-1.1
SYSTEM NOISE DENSITY	DBM/HZ	-171.6	-171.6	.0	.0
IF NOISE BANDWIDTH(1000.000KHZ)	DB-HZ	60.0	60.0	.0	.0
IF NOISE POWER	DBM	-111.6	-111.6	.0	.0
IF SNR (MIN)	DB	4.9	6.0	1.1	-1.1
CARRIER CHANNEL					
CARRIER/TOTAL POWER	DB	-2.9	-2.9	.3	-.3
RECEIVED CARRIER POWER	DBM	-109.6	-108.5	1.2	-1.2
CARRIER LOOP NOISE BW(100. HZ)	DB-HZ	20.0	20.0	.0	.0
NOISE POWER	DBM	-151.6	-151.6	.0	.0
CARRIER/NOISE	DB	42.0	43.1	1.2	-1.2
REQUIRED CARRIER/NOISE	DB	12.0	12.0	.0	.0
AVAILABLE CARRIER MARGIN	DB	30.0	31.1	1.2	-1.2
REQUIRED PERFORMANCE MARGIN	DB	3.0	3.0	.0	.0
NET MARGIN	DB	27.0	28.1	1.2	-1.2
COMMAND CHANNEL (PCM/PSK/PM)					
COMMAND/TOTAL POWER(MI=1.10 RAD)	DB	-3.5	-3.5	.3	-.3
RECEIVED COMMAND POWER	DBM	-110.2	-109.1	1.2	-1.2
PREDETECTION (PSK) NOISE BW(32.000 KHZ)	DB-HZ	45.1	45.1	.0	.0
PREDETECTION (PSK) NOISE POWER	DB	-126.5	-126.5	.0	.0
PREDETECTION (PSK) SNR	DB	16.3	17.4	1.2	-1.2
COMMAND DATA RATE (2.000KBPS)	DB-BPS	33.0	33.0	.0	.0
AVAILABLE ENERGY PER BIT/NOISE DENSITY	DB	28.4	29.5	1.2	-1.2
DECODER DEGRADATION	DB	-2.0	-2.0	.0	.0
REQUIRED ENERGY PER BIT/NOISE DENSITY (BER=E-5)	DB	4.2	4.2	.0	.0
AVAILABLE COMMAND MARGIN	DB	22.2	23.3	1.2	-1.2
REQUIRED PERFORMANCE MARGIN	DB	3.0	3.0	.0	.0
NET MARGIN	DB	19.2	20.3	1.2	-1.2