Fresnel Lens Gamma Ray Telescope

Electrical Power System

Tom Spitzer
1/11/2002

Topics

- **Presentation Slides**
  - Summary of Electrical Power System (EPS)
  - EPS Trades, completed and recommended
  - Electrical Power System Diagram
  - Energy Collection
  - Energy Storage
  - Power Supply Electronics
  - EPS Conclusions
- **Back Up Slides**
  - Overview
  - Driving Requirements and Assumptions
  - Selected Configuration and Rationale
  - Load Analysis
  - Sa Power Curve
  - Mass, Power, and Cost Summary
  - Technologies Required
  - Requirement Verification
  - Risk Assessment

Electrical Power System Summary

- Direct Energy Transfer (DET) system +28(+-7)V bus both spacecraft
  - Detector – 13000W load bus
  - Lens – 600W load bus
  - EOS PM like configuration
- Quad Junction GaAs 35% efficient solar cells
  - Detector SC - 47 sq. meter sun tracking array
    - 2 Deployed panels
    - Single axis tracking
  - Lens SC – 10 sq.meter body mounted array
    - 2 sq. meter required in sun at any time to support load
    - 10 sq. meter panel area distributed over the spacecraft body to allow instrument pointing in any direction
- Lithium Ion Battery
  - Detector – 60AH
  - Lens – 10AH

EPS Trades

- **Triple Junction Vs. Quad. Junction solar cells**
  - High efficiency required to meet high power requirement of ion thrusters
    - Triple junction currently available
    - Quad junction in development
- **NiH2 vs. Lithium Ion Battery**
  - Lithium Ion highest energy/weight ratio
  - Well suited to very low cycle life requirement
- **Future Trades**
  - High Voltage vs. 28V bus
    - Possible system mass, power savings

Electrical Power System Diagram

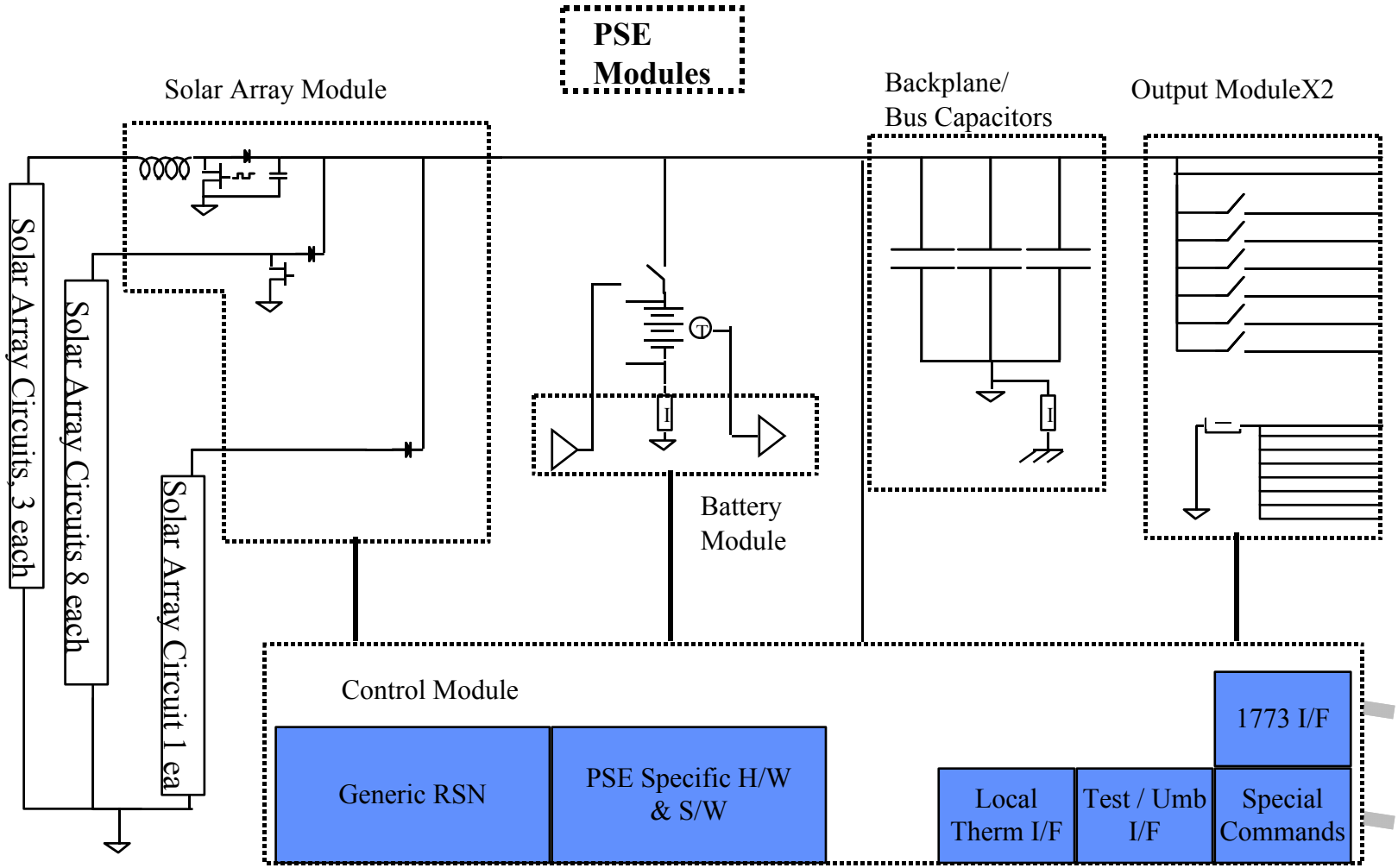

Proposed Solar Array Configuration

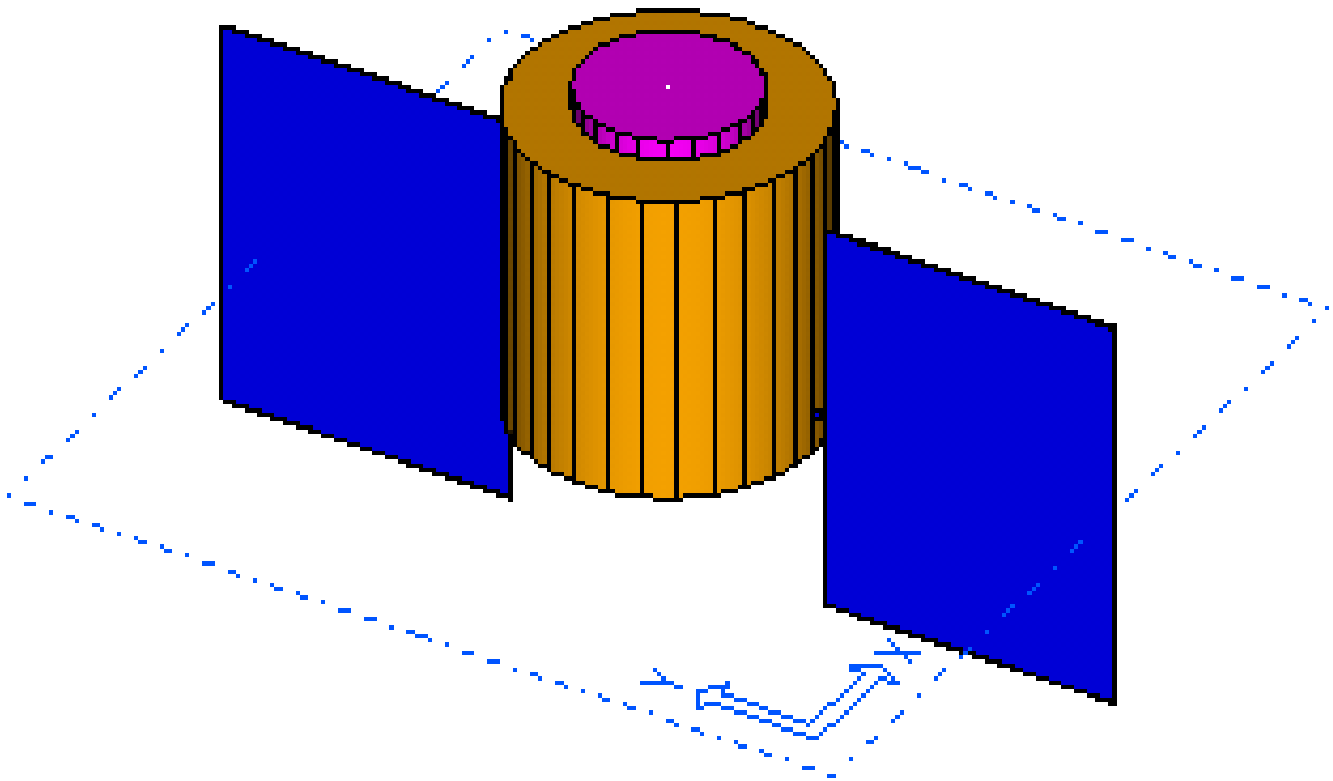

Energy Storage

EAGLE PICHER Technologies, LLC

Lithium-Ion Part No. SLC-16020

Typical Lithium Ion Cell

Φ Physical Characteristics

- System: lithium-ion
- Construction: flat plate
- Terminal: polymeric seal
- Weight (g): 2212
- Dimensions (inches):
  - ™ Width: 1.06
  - ™ Length: 6.69
  - ™ Height: 8.63

Φ Performance

- Nominal voltage: 3.6
- Nameplate capacity: 66 Ah
- Actual BOL capacity: 79 Ah @ 23°C, C/2
- Storage loss: test in progress (nominal % / year)
- Energy density: 303 Wh/L
- Specific energy: 129 Wh/Kg

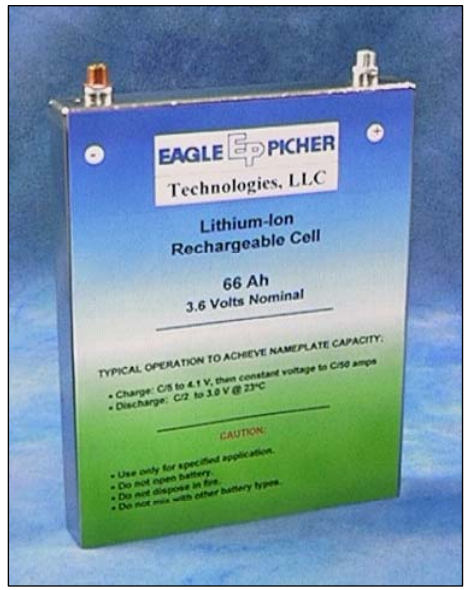

POWER Subsystems

Eagle-Picher Technologies, LLC
Advanced Electrochemical Systems Operation
3220 Industrial Drive | Joplin, Missouri 64801
Phone: (417) 659-9635 | Fax: (417) 626-2088
Web Site: www.epi-tech.com/aes

Advanced Electrochemical Systems Operation

Typical
Power Supply Electronics (PSE)

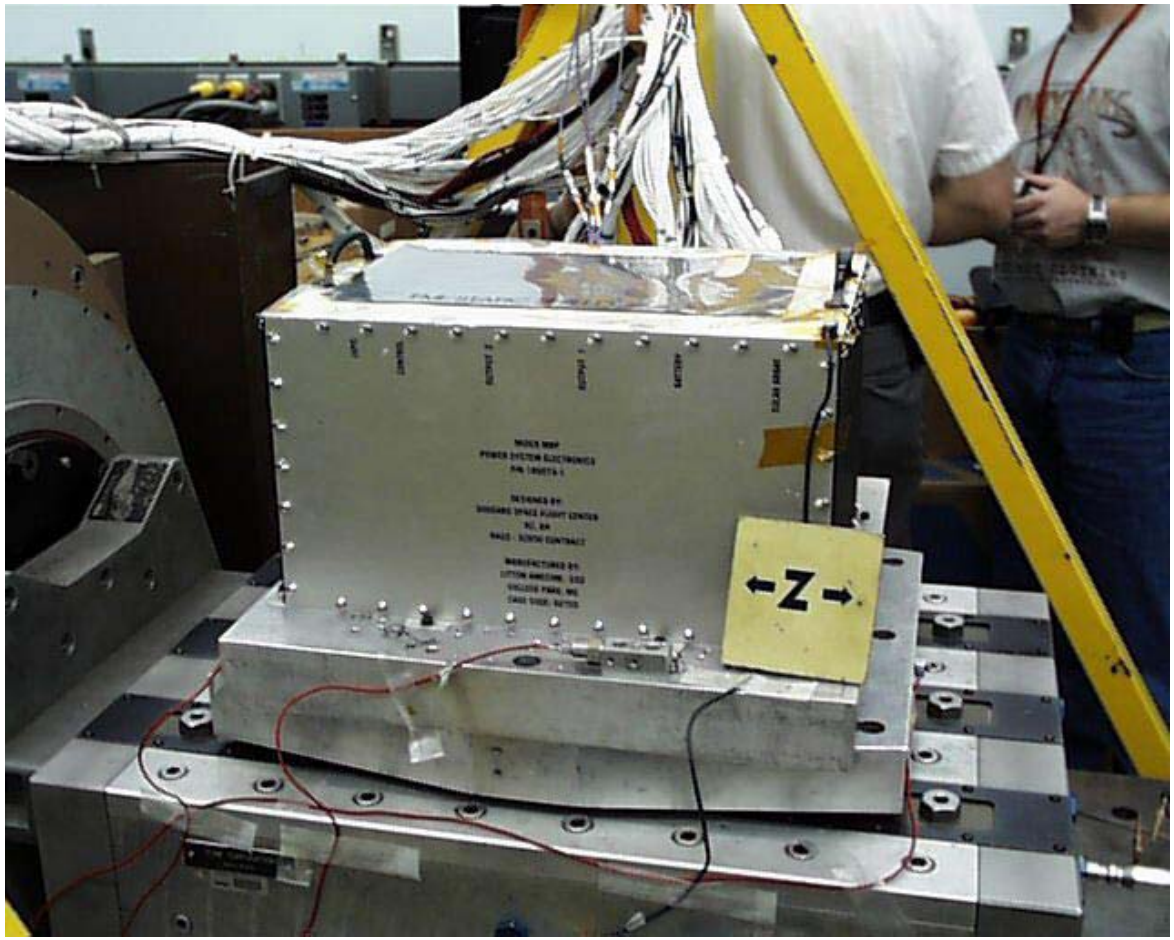

EPS Conclusions

- All Electrical Power System requirements can be met with system components and like configurations shown in this presentation.

- Issues and Concerns
  - **Quad Junction GaAs solar cells still on drawing board**
    - Will likely be required to meet the new Ion Thrust power req. of 10KW
    - Logical progression of current technology

Detailed Charts

"Fresnel Lens Gamma Ray" Electrical Power System

1/11/2002

Electrical Power System Overview, Supporting Data

- **Energy Generation -Solar Arrays**
  - Solar arrays provide electrical power for the spacecraft load while in sunlight and recharge the battery
  - Quad Junction GaAs solar cells are base-lined
- **Energy Storage - Battery**
  - Provides electrical power during launch
  - Provides electrical power during eclipses
  - Provides peak electrical power during sunlight as needed
  - Lithium Ion batteries are base-lined
- **PSE (Power System Electronics)**
  - Provides Solar Array power Regulation
  - Battery charge control
  - Power switching and distribution
  - Fault detection and correction

Electrical Power System
Selected Configuration & Rationale

- Direct Energy Transfer (DET) system +28(+-7)V bus both spacecraft
  - Detector – 13000W load bus
  - Lens – 600W load bus
  - EOS PM like configuration
- Quad Junction GaAs 35% efficient solar cells
  - Detector SC - 47 sq. meter sun tracking array
    - 2 Deployed panels
    - Single axis tracking
  - Lens SC – 10 sq.meter body mounted array
    - 2 sq. meter required in sun at any time to support load
    - 10 sq. meter panel area distributed over the spacecraft body to allow instrument pointing in any direction
- Lithium Ion Battery
  - Detector – 60AH
  - Lens – 10AH

Electrical Power System
Driving Requirements & Assumptions

- Launch: 2012
- Orbit: Heliocentric (full sun) .1AU
- Life: 3 year Minimum
  5 years Goal

Load Analysis – Detector SC

Load Profile								
FL GammaRay-DetectorCraft								
5.0	Mission Life in Years							
				Nominal Mode Day	Nominal Mode Night	Safe Hold		
EPS Load Item Description				Avg. Power Watts	Avg. Power Watts	Power in Watts	Peak Power	Launch Power Requirement
Total Power				**12,861.8**	**12,861.8**	**2,684.7**	**19,343.2**	**403.1**
Time Period Over Which Averaging Is Done For Each Mode (min.)		Contingency						
	Inst Global Contingency	20						
Instruments with Contingency				**180.0**	**180.0**	**36**	**270.0**	**36.0**
Detector				150.0	150.0	30.0	225.000	30.0
	Contingency	20		30.0	30.0	6.0	45.000	6.0
Instrument #2				0.0	0.0	0.0	0.000	0.0
	Contingency	20		0.0	0.0	0.0	0.000	0.0
Instrument #3				0.0	0.0	0.0	0.000	0.0
	Contingency	20		0.0	0.0	0.0	0.000	0.0
Instrument #4				0.0	0.0	0.0	0.000	0.0
	Contingency	20		0.0	0.0	0.0	0.000	0.0
Instrument #5				0.0	0.0	0.0	0.000	0.0
	Contingency	20		0.0	0.0	0.0	0.000	0.0
Instrument #6				0.0	0.0	0.0	0.000	0.0
	Contingency	20		0.0	0.0	0.0	0.000	0.0
Spacecraft Loads with Contingency				**12681.8**	**12681.8**	**2648.7**	**19073.2**	**367.1**
	Spcft Global Contingency	20						
PSE	EOS PM (95.4% eff)	100		100.0	100.0	20.0	150.0	20.0
	Contingency	20		20.0	20.0	4.0	30.0	20.0
Electrical - Harness Losses	BGB Est			120.0	120.0	24.0	180.0	24.0
	Contingency	20		24.0	24.0	4.8	36	4.8
Command & Data Handling	Estimate			18.0	18.0	3.6	27.0	3.6
	Contingency	20		3.6	3.6	0.7	5.4	0.7
Data Recorder	Estimate			25.0	25.0	5.0	37.5	5.0
	Contingency	20		5.0	5.0	1.0	7.5	1.0
Solar Array Drive Motor	4 watts per motor			16.0	16.0	3.2	24.0	0.0
	Contingency	20		3.2	3.2	0.6	4.8	0.0
Solar Array Drive Electronics	BGB,020107			37.2	37.2	7.4	55.8	0.0
	Contingency	20		7.4	7.4	1.5	11.2	0.0
Attitude Control	Still wheel Wheel			130.0	130.0	82	188	26.0
	Contingency	20		26.0	26.0	16.4	37.6	5.2
Com, X Band Transmeter	Estimate			96.0	96.0	48.0	196.0	96.0
	Contingency	20		19.2	19.2	9.6	39.2	19.2
Com, S Band Transmeter	Estimate			8.0	8.0	4.0	9.0	8.0
	Contingency	20		1.6	1.6	0.8	1.8	1.6
Com, Reciever	Estimate			8.0	8.0	8.0	12.0	8.0
	Contingency	20		1.6	1.6	1.6	2.4	1.6
Thermal	Estimate			10.0	10.0	2.0	15.0	2.0
	Contingency	20		2.0	2.0	0.4	3.0	0.4
Propulsion	Bob E.,020107,1:30 PM			10000.0	10000.0	2000.0	15000.0	100.0
	Contingency	20		2000.0	2000.0	400.0	3000.0	20.0

Load Analysis –Lens SC

Load Profile									
FL GammaRay-Lens									
5.0	Mission Life in Years								
				Nominal Mode Day	Nominal Mode Night	Safe Hold			
EPS Load Item Description				Avg. Power Watts	Avg. Power Watts	Power in Watts		Peak Power	Launch Power Requirement
Total Power				**590.4**	**590.4**	**230.4**		**936.0**	**228.8**
Time Period Over Which Averaging Is Done For Each Mode (min.)		Contingency							
	Inst Global Contingency	20							
Instruments with Contingency				**120.0**	**120.0**	**24**		**180.0**	**24.0**
Metrology				100.0	100.0	20.0		150.000	20.0
	Contingency	20		20.0	20.0	4.0		30.000	4.0
Instrument #2				0.0	0.0	0.0		0.000	0.0
	Contingency	20		0.0	0.0	0.0		0.000	0.0
Instrument #3				0.0	0.0	0.0		0.000	0.0
	Contingency	20		0.0	0.0	0.0		0.000	0.0
Instrument #4				0.0	0.0	0.0		0.000	0.0
	Contingency	20		0.0	0.0	0.0		0.000	0.0
Instrument #5				0.0	0.0	0.0		0.000	0.0
	Contingency	20		0.0	0.0	0.0		0.000	0.0
Instrument #6				0.0	0.0	0.0		0.000	0.0
	Contingency	20		0.0	0.0	0.0		0.000	0.0
Spacecraft Loads with Contingency				**470.4**	**470.4**	**206.4**		**756.0**	**204.8**
	Spcft Global Contingency	20							
PSE	EOS PM (95.4% eff)	100		20.0	20.0	4.0		30.0	4.0
	Contingency	20		4.0	4.0	0.8		6.0	4.0
Electrical - Harness Losses	BGB Est			15.0	15.0	3.0		22.5	3.0
	Contingency	20		3.0	3.0	0.6		4.5	0.6
Command & Data Handling	Estimate			30.0	30.0	6.0		45.0	6.0
	Contingency	20		6.0	6.0	1.2		9.0	1.2
Data Recorder	Estimate			25.0	25.0	5.0		37.5	5.0
	Contingency	20		5.0	5.0	1.0		7.5	1.0
Solar Array Drive Motor	4 watts per motor			0.0	0.0	0.0		0.0	0.0
	Contingency	20		0.0	0.0	0.0		0.0	0.0
Solar Array Drive Electronics	BGB,020107			0.0	0.0	0.0		0.0	0.0
	Contingency	20		0.0	0.0	0.0		0.0	0.0
Attitude Control	Still wheel Wheel			130.0	130.0	82		188	26.0
	Contingency	20		26.0	26.0	16.4		37.6	5.2
Com, X Band Transmeter	Estimate			96.0	96.0	48.0		196.0	96.0
	Contingency	20		19.2	19.2	9.6		39.2	19.2
Com, S Band Transmeter	Estimate			8.0	8.0	4.0		9.0	8.0
	Contingency	20		1.6	1.6	0.8		1.8	1.6
Com, Reciever	Estimate			8.0	8.0	8.0		12.0	8.0
	Contingency	20		1.6	1.6	1.6		2.4	1.6
Thermal	Estimate			10.0	10.0	2.0		15.0	2.0
	Contingency	20		2.0	2.0	0.4		3.0	0.4
Propulsion	Bob E.,020107,1:30 PM			50.0	50.0	10.0		75.0	10.0
	Contingency	20		10.0	10.0	2.0		15.0	2.0

SA Power Curve (47 Sq. M) – Detector SC

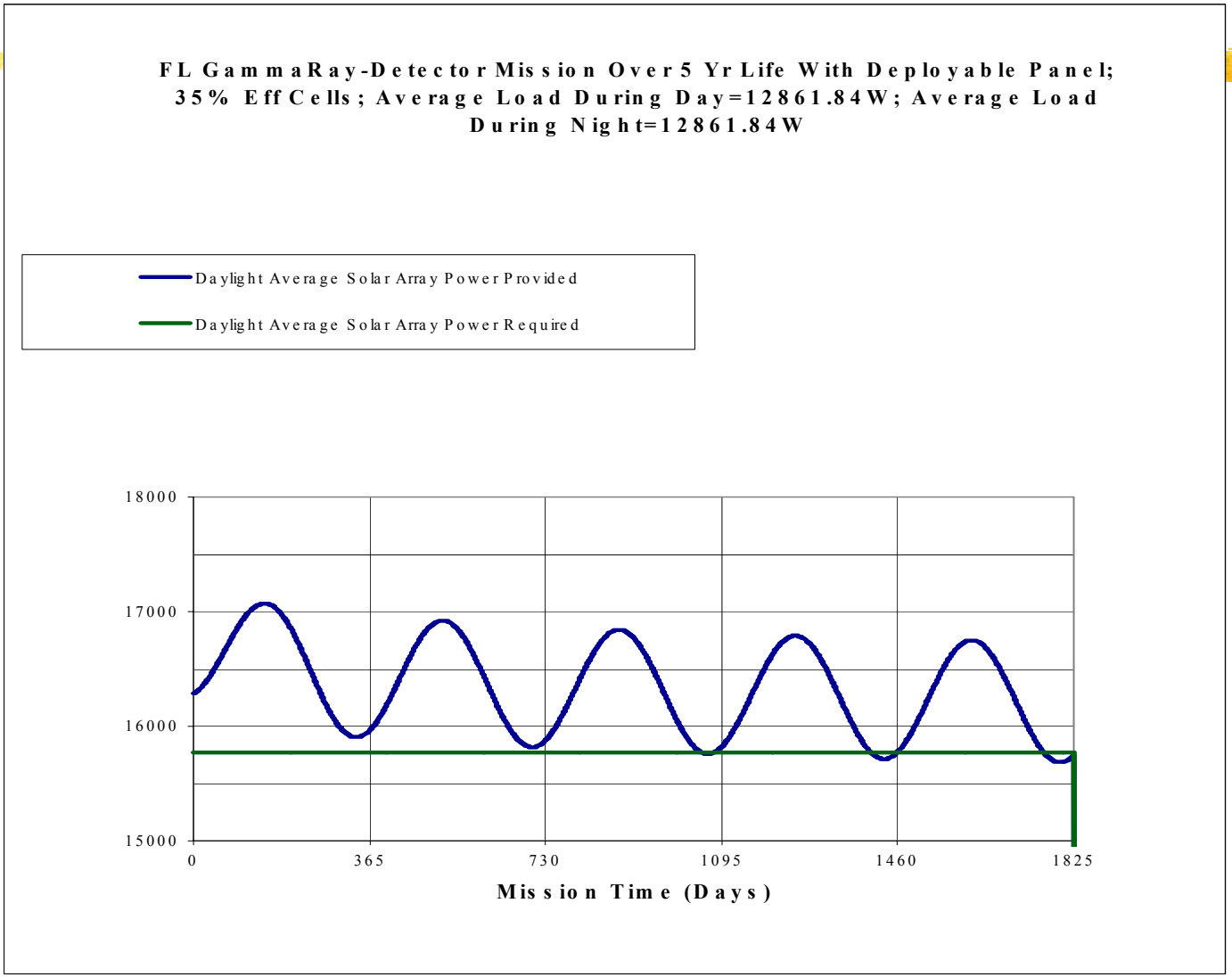

SA Power Curve (2 Sq.M) – Lens SC

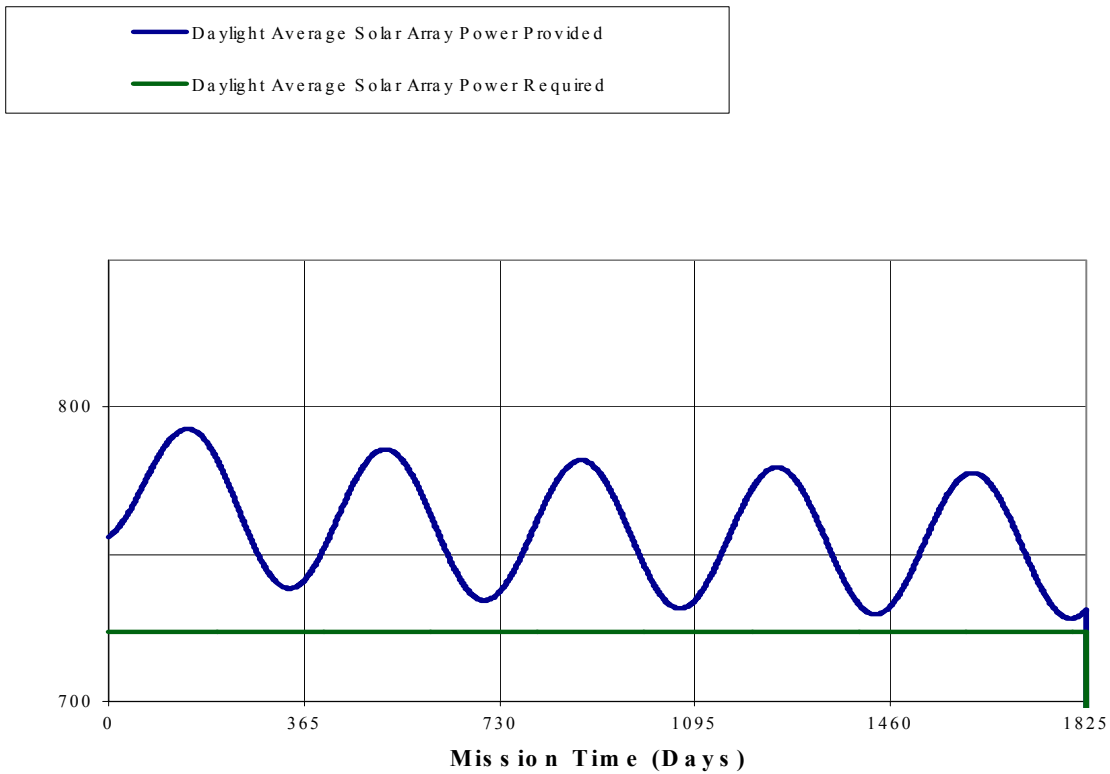

EPS Mass, Power,Cost Summary Detector SC

EPS Mass, Power,Cost Summary
Lens SC

Electrical Power System Technologies Required

- Selected 23 M^2 solar array area using Quad Junction Gallium Arsenide (QJGaAs) solar cells.
  - Impact on design. QJGaAs cells are not currently available
  - Alternatives: 28% efficient solar cells with increased solar array area may be prohibitive
  - Feedback to technology developer: Develop 35% efficient solar cells.
  - TRL 4
- Battery will be 60 AH –Detector SC, 10AH – Lens SC, Lithium Ion chemistry to support launch loads TRL 9 (by time of launch)
- PSE will be a modification of the EOS PM TRL 9

Electrical Power System Requirements Verification

- Standard verification for all components

Electrical Power System Risk Assessment

- **Solar Cell Efficiency of 35% is a mid term risk.**
  - **Solar panel production for 35% efficient cells is expected within the next 8 years**
    - 35% efficient cells may be a mission driver due to the doubling of the Ion Thrust power requirement